RevNo	Revision note	Date	Signature	Checked
0	No Revisions	xx/xx/xx	C.W.	

QC Document/WI 25

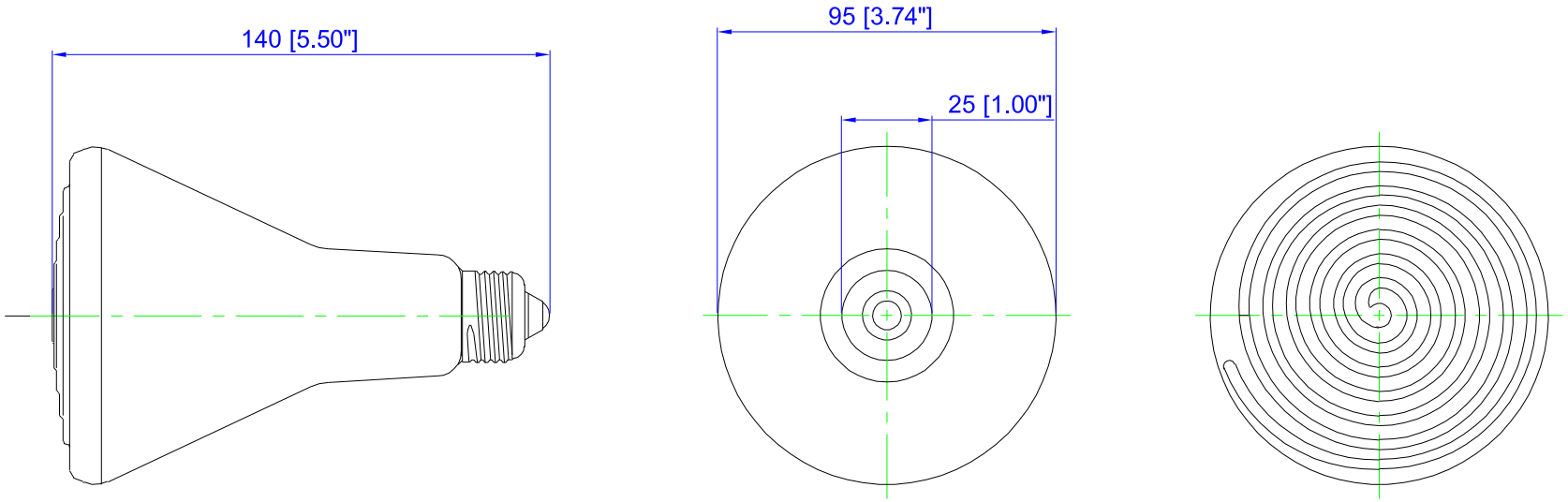

Note.

* All dimensions are in mm [inches]

Ref -	Qty -	Standard ESE DIA.95 X 140MM			Part no. ESE0000000
Drawn by C.W.	Checked by	Tolerance +/- 3%	Filename ESE DIA.95 X 140MM	Date 05/02/03	Scale Not to scale

Ceramicx Ireland Ltd

Title: ESE DIA.95 X 140MM

Drawing no.	Edition	Sheet
050203D	1	1